swiss made

Single Speed Shearing Plant — Instruction Manual

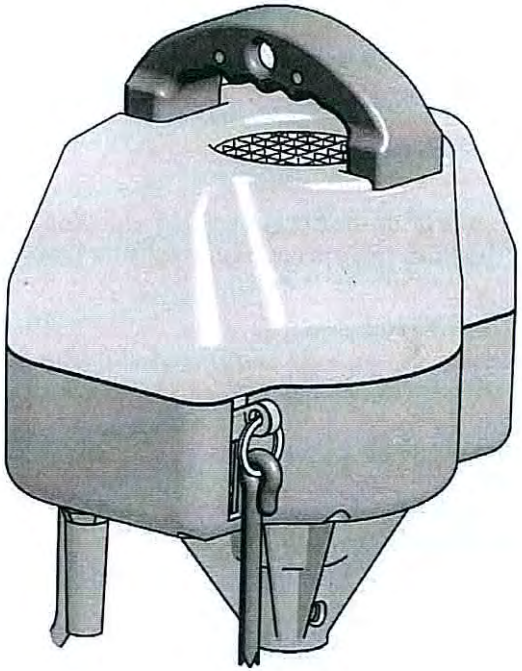

Version/Index: ONE/E

01-16

1.3 Stipulated usage

The shearing plant's intended purpose of use is described in Chapter 2.2, "Purpose of use". Use for any other purposes, particularly on people and dangerous types of animals, especially predators, is expressly forbidden.

The shearing plant must only be used in dry areas.

The details contained in Chapter 2.3, "Technical data", are to be considered as legally binding limit values and characteristic data.

The safety check refers only to the portable shearing plant and not to the mechanical shaft and the shearing handpiece.

1.4 Basic safety principles

1.4.1 Power supply connections

- Never plug the equipment into damaged sockets. Observe the relevant regulations applicable in your country.
- Maintenance and cleaning work must only be carried out when the equipment is not plugged in.
- Sockets must be equipped with a circuit breaker (FI).

1.4.2 Safety precautions

- Avoid touching machinery that has come into contact with water or other liquids.
- Never clip wet animals.
- Children are forbidden from operating the equipment.
- Lay out the power cable cleanly.
- Check the power cable occasionally for damage.
- Keep the power cable well away from machinery & equipment operating in close proximity.
- Switch off the plant before pulling out the plug.
- After use remove the plug from its socket. The plant should only be cleaned or the cutter replaced when the plug is removed from the power socket.
- Avoid kinks or coils in the cable. Never wind the power cable around the plant during periods of storage. This can result in breaks and damage to the insulation.

- Ensure that animals do not stand on or walk over the cable, and that they do not get caught up in the cable.
- Keep children away from shearing areas.
- Never use a damaged plant. Have the machine checked for faults and repaired immediately by an authorised service agent.

Diag. 2, 3, 5

- The air intake for the ventilation holes (Diag. 2+3, pos. a) must be kept clear. Never insert any object into the shearing plant's ventilation holes.
- Never shear in the vicinity of explosive objects or gases.
- Never shear with blunt or broken shearing combs and cutters.
- Avoid any contact with the moving shearing cutters.
- Store the plant in a clean, dry place to which children and animals have no access.

1.4.3 Noise emission / personal protective equipment

- Noise emission during operation is less than 70 dB (A), as the noise of the shearing hand-piece is also present during shearing. We recommend that ear protection, safety glasses and gloves are always worn when operating the plant.
- Personal protective equipment to be provided by the operator.

1.4.4 Residual dangers

Should dangers and hazards occur during operation which are not directly related to the shearing of animals, we request that you inform us of this. This also applies in the event of a technical failure that causes a hazard.

1.4.5 Replacement power cable

If the power cable of this equipment is damaged, it must be replaced by the manufacturer or its after-sales service or a similarly qualified person to avoid danger.

1.4.6 Supervision of children

Children should be supervised to ensure that they do not play with the equipment.

Table of contents

1 Safety regulations
1.1 Introduction
1.2 Symbols and warning notes
1.3 Stipulated usage
1.4 Basic safety principles
1.4.1 Power supply connections
1.4.2 Safety precautions
1.4.3 Noise emission / personal protective equipment
1.4.4 Residual dangers
1.4.5 Replacement power cable
1.4.6 Supervision of children
1.5 Operator requirements
2 Stipulated usage
2.1 Component list
2.2 Purpose of use
2.3 Technical data
2.4 Equipment
3 Initial start-up
3.1 Important notes
3.2 Assembling the shearing plant
3.2.1 Securing / suspending the shearing plant
3.2.2 Assembling the flexible drive
3.3 Switching the shearing plant on / off
4 Maintenance
4.1 Cleaning
4.2 Service
4.3 Lubrication
4.3.1 Portable shearing plant
4.3.2 Flexible drive
4.3.3 Shearing handpiece
4.4 Storing the machine
5 Troubleshooting and repairs
5.1 Introduction
5.2 Troubleshooting list
6 Environmental protection and waste disposal
6.1 Introduction
6.2 Material groups
7 Contact addresses

Illustrations: at the end of the manual

1 Safety regulations

1.1 Introduction

- This chapter describes the safety regulations that are to be taken into consideration as a matter of course when using the shearing plant.
- **All persons who carry out work on and with the shearing plant must read the operating instructions.**
- **The operating instructions are to be kept in a secure place that is accessible at all times.**
- Authorised service agents may only carry out service and repair work.

1.2 Symbols and warning notes

Various symbols are used in the operating instructions. These symbols indicate possible hazards or bring to the user's attention such technical information that, if not complied with, may lead to personal injury and material damage or to uneconomic operation.

Hazard symbols

Warning

Denotes a possibly hazardous situation. Serious injury and even death can result if such situations are not avoided.

Caution

Denotes a possibly hazardous situation. Light or slight injury can result if such situations are not avoided.

Information symbols

Note

A note which, if not complied with, can lead to operational stoppages or damage.

Diagram note

This symbol, complete with diagram number, denotes the corresponding diagram at the end of the operating instructions.

1.5 Operator requirements

The safe use of the machine places few demands on operating personnel. These must, however, be observed and maintained as a matter of course.

- The operator has experience in dealing with the animals being shorn.
- The operator has read and understood the operating instructions, or has been indoctrinated into the operation of the machine by a skilled person, and the risks and dangers have been pointed out to him.

2 Stipulated usage

2.1 Component list

Designation of individual parts

Diag. 1

Pos.	Description	Qty.
1	Handle	1
2	Upper section ONE	1
3	Reinforcement plate ONE	2
4	LS-screw	6
5	Motor ONE	1
7	Insulating flange	1
8	Centering washer	1
9	Countersunk screw	1
10	Insulating washer	1
11	Coupling flange	1
12	PT-screw countersunk	4
13	Capacitor	1
14	Capacitor	1
15	Drive housing ONE	1
16	LS-screw	4
17	Socket head cap screw	7
18	Cable	1
19	Anti-kink sleeve	1

Pos.	Description	Qty.
20	Hexagonal nut	1
21	Speed control sensor ONE	1
22	Control unit ONE/EVO	1
23	Hexagonal nut self-securing	2
25	PH-screw	1
26	Switch support	1
27	Micro switch	1
28	Socket head cap screw Phillips	2
29	Retaining ring for shaft	1
30	Washer	1
31	Spring for switch	1
32	Lever for switch	1
33	Cord black	1
34	Ring spanner	1
35	Catch spring ONE/EVO	1
37	PT-screw	1
38	Rating plate	1
40	Spacer sleeve (USA only)	1

2.2 Purpose of use

The portable shearing plant is specially designed to provide the drive for mechanical shearing handpieces. The complete shearing unit is expressly designed for the shearing of sheep, goats, llamas, alpacas and other members of the Camelidae species.

2.3 Technical data

Product name:	ONE
Mains voltage:	see rating plate
Motor output:	see rating plate
Rotary speed:	see rating plate
Required fuse protection:	see rating plate
Dimensions in mm (W/H/L):	243 x 317 x 209
Weight not including cable:	7.8 kg
Max. ambient temperature:	0° - 40 °C
Max. humidity:	10% - 90% (relative)
Noise emission (LpAm):	< 70 dB (A)

We reserve the right to make technical changes and improvements without notice.

2.4 Equipment

Portable shearing plant
Operating instructions
Screwdriver
Drip feed lubricator 100 ml
Universal grease

Options

Flexible drive, worm
Flexible drive, pin
Ferrule short
Shearing handpiece, Icon, worm
Shearing handpiece, Icon, pin
Combs and cutters for the shearing handpiece

3 Initial start-up

3.1 Important notes

- The voltage specified on the maker's plate and that of the local power supply must match. The plant may only be connected to an AC power supply.
- It is a compulsory that the operator has read the safety regulations.
- In the event that the plant is operated from a generator, the mains supply voltage must not exceed that specified on the maker's rating plate.

3.2 Assembling the shearing plant

Pay attention to sufficient fastening of the shearing plant.

3.2.1 Securing / suspending the shearing plant

The shearing plant can be suspended by means of a strong rope or chain. The hole provided in the handle should be used to secure the plant (Diag. 2, pos. c).

3.2.2 Assembling the flexible drive

Diag. 2+3

- Start up the motor (see Chapter 3.3).
- Press the lock button located at the flexible drive's upper coupling manually (Diag. 3, pos. b).
- Now push the flexible drive coupling into the shearing plant's coupling sleeve and then position this by means of slight pressure upwards until the lock button engages in the hole (Diag. 3, pos. c).

3.3 Switching the shearing plant on / off

Important:

Diag. 2

Make sure that the ventilation holes are always clear (Diag. 2+3, pos. a). The shears drive remains switched off after the connection to the power supply. The shearing plant is switched on and off respectively via the cord / lever (Diag. 2, pos. b). The drive is switched on by means of one downward pull, and is switched off again by repeating this operation.

Should the power supply be interrupted whilst the drive is running, for safety reasons the motor switches off automatically, which means that the unit must be switched on again via the cord / lever when the power supply is re-established.

4 Maintenance

4.1 Cleaning

Before commencing any maintenance work disconnect the electrical power supply by pulling out the plug!

Remove any oil and dirt from the shearing plant by means of a dry cloth. Do not use liquids!

4.2 Service

For safety reasons the portable shearing plant should be subjected to an annual inspection. It is important that the self-tensioning belt is checked periodically, since the functionality of the patented safety cut-out device is dependent on this.

4.3 Lubrication

Lubricate the handpiece in accordance with the manufactures specifications, since a lack of lubrication is the most common source of faults for unsatisfactory shearing results.

4.3.1 Shearing plant

Requires no lubrication.

4.3.2 Flexible drive

prior to each period of operation

Diag. 4

Oil the flexible drive prior to use, and, at least each time the cutters are replaced (Diag. 4, pos. a).

after 100 hours of operation

The flexible drive is fitted with sealed and permanently lubricated ball bearings. The rotating shaft bore must, however, be greased at regular intervals (after approximately 100 hours of operation or every 2 years). To perform this task dismantle the flexible drive in order to remove old grease residue from the shaft bore. Then re-lubricate the shaft bore along its whole length with fresh, high-quality mineral grease.

4.3.3 Shearing handpiece

See operating instructions for shearing handpiece.

4.4 Storing the machine

Get into the habit of always giving the shearing plant a good clean after use, store the unit in a dry and clean location out of the reach of children.

5 Troubleshooting and repairs

5.1 Introduction

The following troubleshooting guide will aid in determining problems and offer a solution. An authorised service point may only carry out solutions that appears against a dark background.

An authorised service agent is to be contacted in the event of malfunctions that are not contained in this manual.

5.2 Troubleshooting list

MALFUNCTION	CAUSE	SOLUTION
Motor does not run.	No power.	Power supply and/or fuse faulty.
	Cable faulty.	Have the cable replaced.
	Switch faulty.	Have the switch replaced.
	Motor faulty.	Have the motor replaced.
	Control unit faulty.	Have control unit replaced.
	Capacitors faulty.	Have the capacitors replaced.
Motor always switching off.	Cutter blocked.	Remove blockage.
	Mechanical damage in the shearing handpiece or flexi-shaft.	For the purposes of fault finding first of all uncouple the shearing handpiece and restart the plant. Uncouple the flexi-drive from the shearing plant if the fault persists. Rectify any damage. If the fault still persists, then have the shearing plant repaired.
	Reverberation sensor's magnet faulty.	Have the insulation flange, inc. magnet, replaced.
	Faulty reverberation sensor.	Have the reverberation sensor replaced.
	Power supply too weak.	Check the power supply.
Motor system does not switch off by lock up.	Control unit faulty.	Have control unit replaced.
Shearing unit is noisy or vibrates.	Faulty motor bearing.	Have the motor replaced.
Motor gets hot.	Faulty motor bearing.	Have the motor replaced.
	Ventilation screen dirty.	Clean ventilation screen.
	Malfunctions in the flexible drive and / or shearing handpiece.	Have fault rectified.
Shearing plant cannot be switched off.	Switch faulty.	Have the switch replaced.

6 Environmental protection and waste disposal

6.1 Introduction

The operator bears the responsibility for disposing of the machine in the proper manner. Please observe the relevant regulations applicable in your country.

6.2 Material groups

Please hand this in to a service point or your local specialist electrical workshop when the machine is to be dismantled.

Material	contained in pos. X taken from Diag. 1
Rubber	18
Polyamide PA	2/10/15/19
Polypropylene PP	33
POM	7/32
Iron/steel	3/4/5/8/9/11/12/16/17/23/25/26/28/29/30/31/34/35/37/40
Copper	18
Brass	20/27
other substances	38
Electronics	13/14/21/22/27

7 Contact address

The sales point or company specified on your guarantee certificate are authorised service points, or, alternatively, refer to the nearest service point in your area.

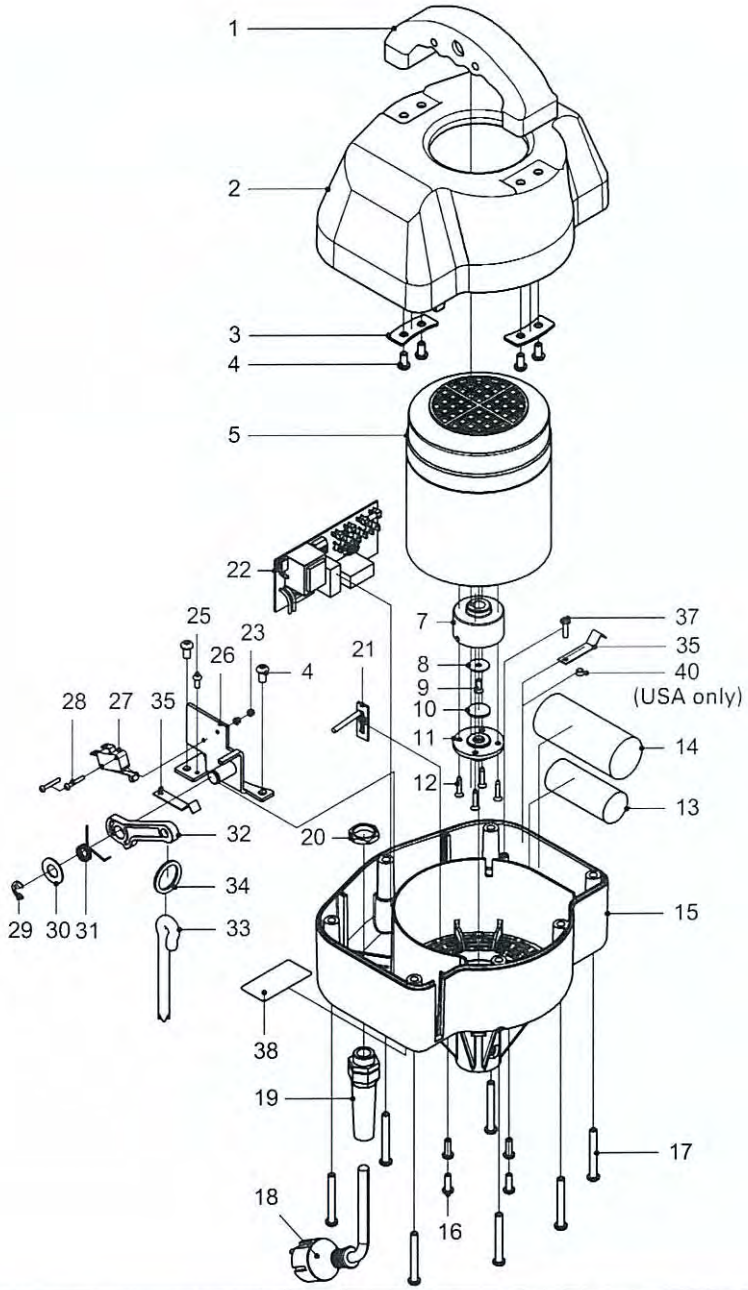
1
2
3
4
5
22
25
23
26
4
21
28
27
35
7
8
9
10
11
12
37
35
40
(USA only)
14
13
32
20
34
29
30
31
33
15
38
19
17
18
16

1

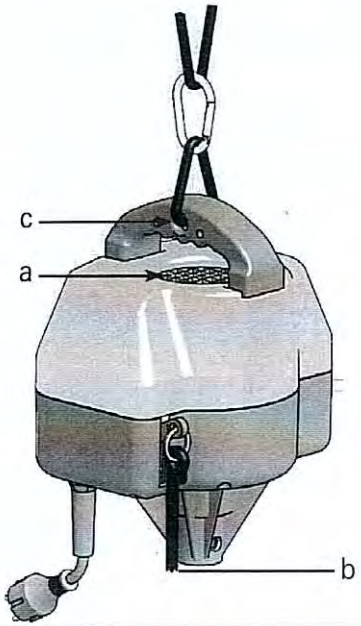
c
a
b

2

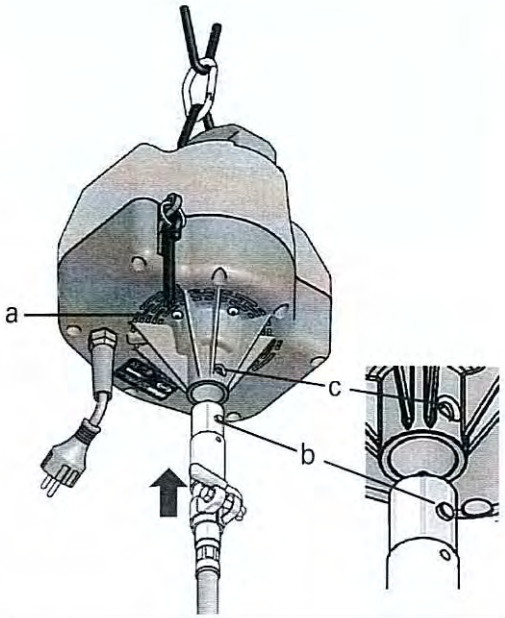
a
c
b

3

a

4

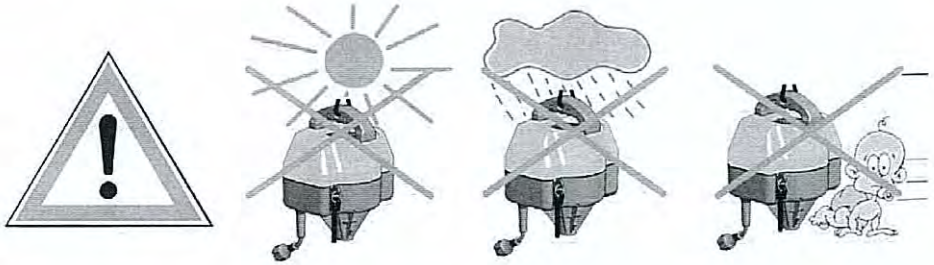

5

Warranty

Item	
Serial no.	
Date of purchase	
Stamp and signature	

In case of claim, please return your machine with the instruction manual and the warranty card directly to your local distributor. Please do not cut off the warranty card from the instruction manual.

© 2016 Heiniger AG. All rights reserved.
This instruction manual may not be duplicated or distributed, neither completely nor in extracts, or by electronic or mechanical means (including photocopying), transmitted or used for the purpose of competition without authorisation from Heiniger AG.

Subject to change without notice.

Contact:
Heiniger AG | Industrieweg 8 | CH - 3360 Herzogenbuchsee | Switzerland
Tel. +41 (0)62 956 92 00 | marketing(at)heiniger.com